BAUMANN

MECHANICAL DRIVE COMPONENTS

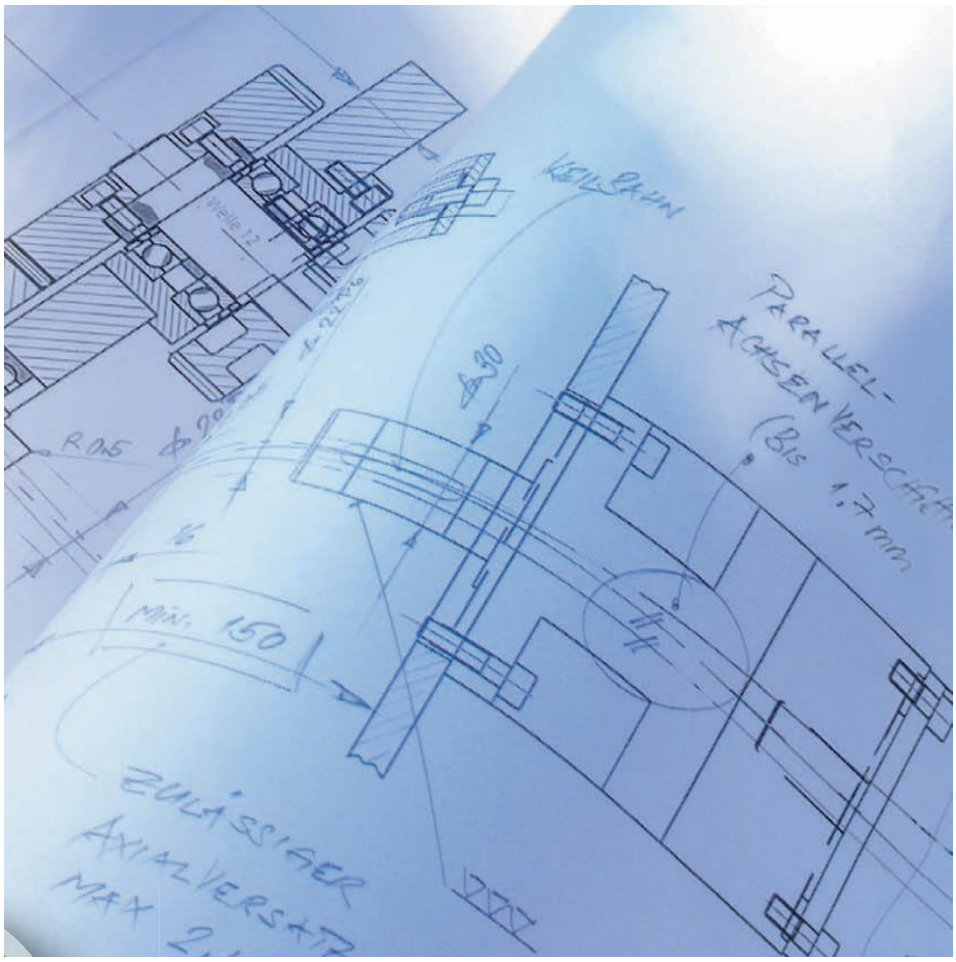

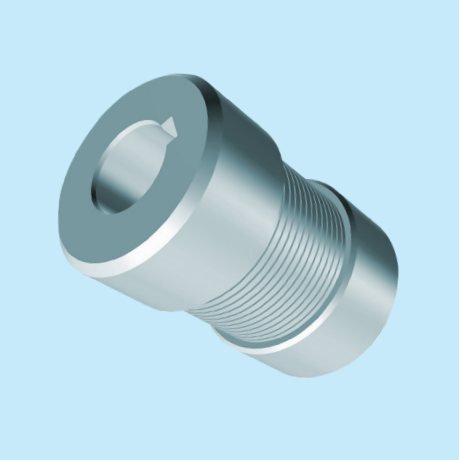

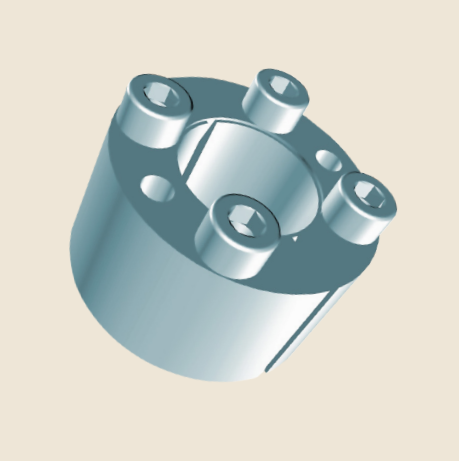

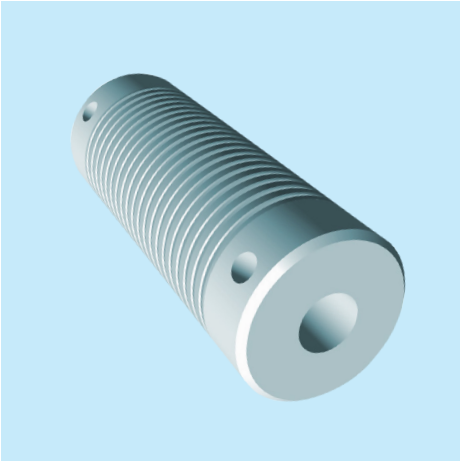

FLEX COUPLINGS

MINIFLEX COUPLINGS

BELLOW COUPLINGS

LOCKING ASSEMBLIES

SPECIAL SOLUTION

Please contact us:
couplings@baumann-group.com

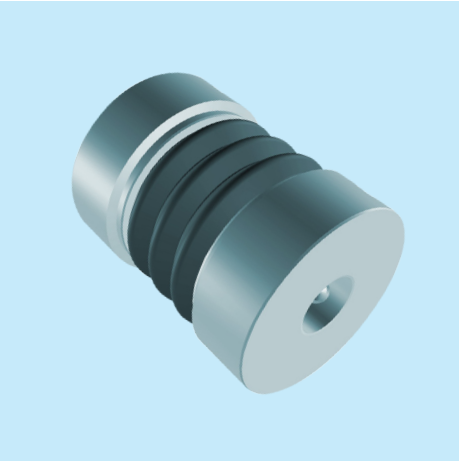

SUMMARY

FLEX COUPLINGS	3–8
MINIFLEX COUPLINGS	9–10
BELLOW COUPLINGS	11–12
LOCKING ASSEMBLIES	13–14
SPECIAL SOLUTION	15

FLEX-COUPLINGS

MM, MF, FF, FN, K-MM

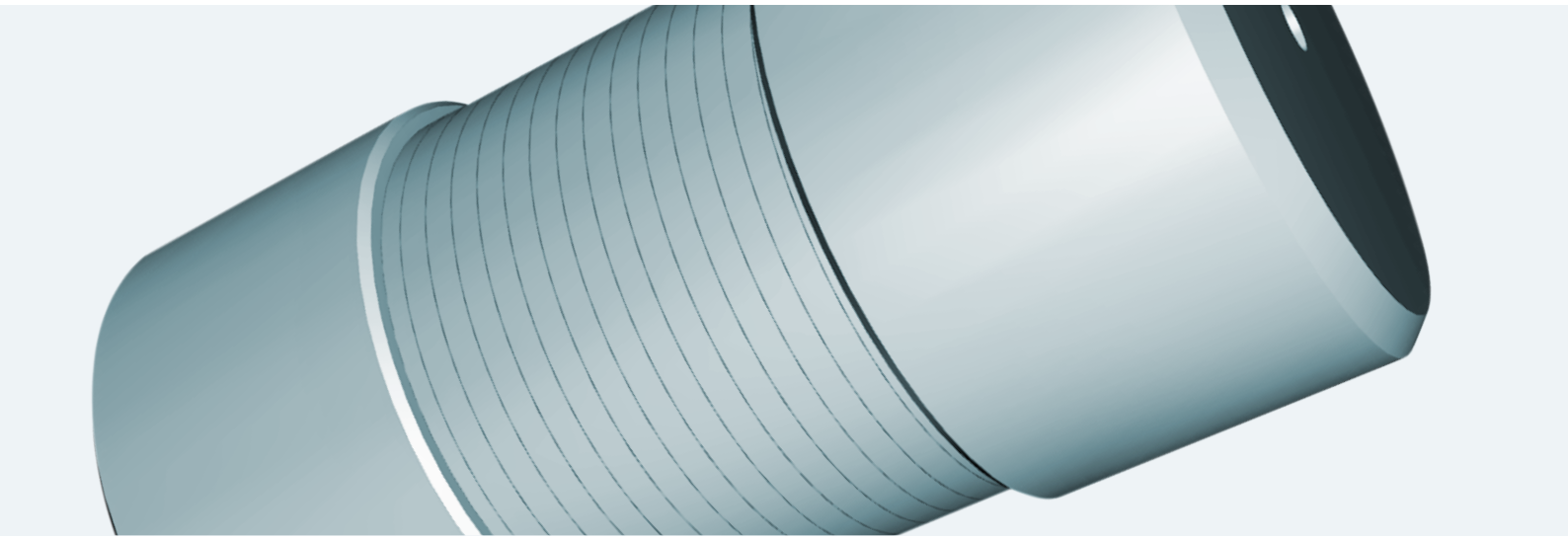

STRUCTURE

The rotation-elastic transmission element consists of a spring assembly with three layers and each layer consists of three single springs with square cross section.

The spring assemblies are linked by hubs or flanges, according to the type.

The types MM, MF and FF are available in three lengths. Material structure: The surface of hubs and flanges is turned, couplings are peen-finished.

FEATURES/USES

- Independent of the direction of rotation
- Small mass moment of inertia
- The compact and rotation symmetrical design avoids any substantial unbalance. Therefore a high number of revolutions is allowed
- Coupling has a low absorbing effect by elastic deformation and internal friction of the spring assembly
- All of the coupling components are made of steel
- The standard model is resistant to temperatures between – 40 °C and +100 °C
- If needed, couplings resistant to temperatures up to + 300 °C are available
- Our couplings cannot be used in combustion engines (overstressing)

FLEX COUPLINGS

MISALIGNMENT

BAUMANN Flex couplings compensate for radial, axial and angular misalignment. The values in the table should be met with regard to a long life. The type K-MM which includes a splined shaft can be selected if more axial misalignment is required.

STANDARD MODELS

The standard program includes couplings for torques from 2,5 to 900 Nm. These couplings are available in different lengths and types. If required by the customer, we rework finished bores, keyways, taps, etc.

SPECIAL MODELS

The type MM and length K is available in the sizes 06 to 28 as corrosion resistant type. The types MM and MF of the sizes 06 to 28 and of the lengths K, L and D can be delivered with clamp-hubs. All sizes and types are available for temperatures up to 300 °C.

MAINTENANCE

Usually, the primal lubrication is sufficient, therefore, no further lubrications are necessary at a later point of time.

AVAILABILITY

All standard couplings are available at short notice with pilot bores. Required reworks can be made within 3 - 5 weeks. For special applications and non-standard executions please contact us.

TYPES

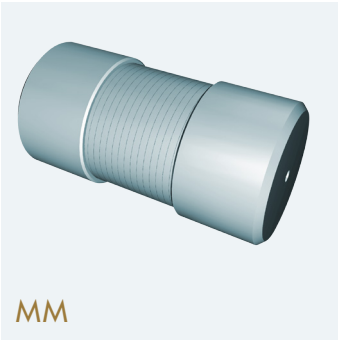

MM

FN

FF

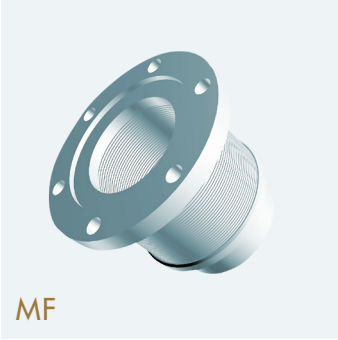

MF

K-MM

FLEX COUPLINGS

MM, MF, FF

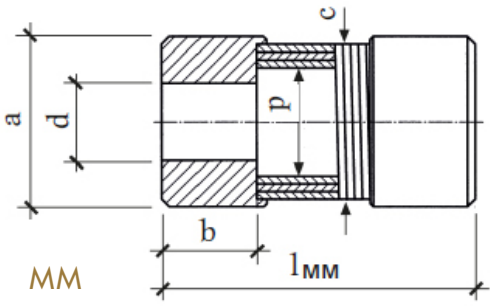

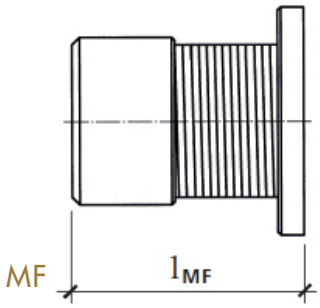

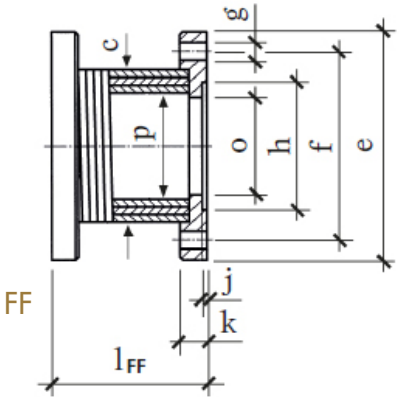

DIMENSIONS

Couplings, type MM, MF and FF, are available with three different lengths K, L, D.

Nominal bore in mm = size				06	08	12	14	16	19	20	24	25	28	30*	35*	40*	50*	60*
Nominal torque	LENGTH		Nm	2.5	5	10	10	20	20	40	40	90	90	150	220	300	500	900
a			mm	17	21	26	30	35	38	45	48	55	55	65	75	80	100	120
b				8	10	15	15	20	20	25	25	31	31	37	44	50	62	75
c				15.5	19	24	28	32	36	40	45	50	52	60	70	75	95	115
d pilot bored			mm	2.5	3.5	5.5	5.5	5.5	5.5	5.5	5.5	5.5	5.5	5.5	5.5	21	24	34
d with keyway				6	8	12	14	16	19	20	24	25	28	30	35	40	50	60
d without keyway				10	12	15	19	20	25	27	31	34	35	40	45	50	64	75
e			mm	32	42	48	52	58	62	65	70	75	78	90	100	120	150	180
f				24	30	37	40	47	50	52	57	62	65	74.5	84	101.5	130	155.5
g				3×3.4	3×4.8	3×4.8	3×4.8	4×4.8	4×4.8	4×4.8	4×4.8	6×5.8	6×8.5	4×7	6×7	8×7	8×9.5	8×11.5
h^{H7}			mm	15	18	22	25	30	32	35	40	42	45	47	57	75	90	110
j				1.5	1.5	1.5	1.5	1.5	1.5	1.5	1.5	1.5	1.5	2.5	2.5	2.5	3	3
k				4	6	6	6.5	6.5	7	7	7	8.5	8.5	10	13	14	17	20
l_{MM}	MM	K	mm	25	35	50	50	65	65	80	80	100	100	125	150	170	210	250
		L		30	45	60	60	80	80	95	95	120	120	150	180	200	250	300
		D		35	50	70	70	90	90	110	110	140	140	175	210	240	300	350
l_{MF}	MF	K	mm	20	30	40	40	50	50	60	60	75	75	95	115	130	160	190
		L		25	40	50	50	65	65	75	75	95	95	120	145	160	200	240
		D		30	45	60	60	75	75	90	90	115	115	145	175	200	250	290
l_{FF}	FF	K	mm	15	25	30	30	35	35	40	40	50	50	65	80	90	110	130
		L		20	35	40	40	50	50	55	55	70	70	90	110	120	150	180
		D		25	40	50	50	60	60	70	70	90	90	115	140	160	200	230
o			mm	9.5	12	15	18	21	24	25	30	32	34	38	43	48	60	70
p				11	13	16.5	20.5	22.4	26.4	28	33	35	37	40.8	46	51	65	76.6

Part number of pilot bored design

		06	08	12	14	16	19	20	24	25	28	30*	35*	40*	50*	60*
MM	K	6110390	6110461	6110597	6110695	6110798	6110882	6110973	6111041	6111111	6111251	6111295	6111323	6111357	6111376	6111387
	L	6110398	6110491	6110628	6110719	6110826	6110903	6110998	6111056	6111217	6111266	6111305	6111326	6111362	6111379	-
	D	6110378	6110410	6110502	6110631	6110723	6110836	6110913	6111001	6111064	6111229	6111270	6111307	6111328	6112475	6111383
MF	K	6110175	6110201	6110229	6110234	6110238	6110258	6110261	6110266	6110270	6110274	6110277	6110281	6110284	6110287	-
	L	6110176	6110226	6110232	6110236	6110256	6110259	6110263	6110267	6110272	6110275	6110279	6110282	6110285	6110288	6110290
	D	6110177	6110227	6110233	6110237	6110257	6110260	6110264	6110268	6110273	6110276	6110280	6110283	6110286	6112476	6110291
FF	K	6110104	6110107	6110119	6110129	6110133	6110143	6110324	6111393	6111397	6111503	6111507	6111517	6111528	6111538	-
	L	6110105	6110108	6110120	6110130	6110134	6110144	6110325	6111394	6111398	6111504	6111508	6111519	6111529	099338	6111544
	D	6110106	6110109	6110121	6110131	6110135	6110145	6110326	6111395	6111399	6111505	6111509	6111520	6111530	6112478	-

*Outer tolerance h9

FLEX COUPLINGS

MM, MF, FF

SPECIFICATIONS

Nominal bore in mm = Size		LENGTH			06	08	12	14	16	19	20	24	25	28	30	35	40	50	60
Nominal torque			M_N	Nm	2.5	5	10	10	20	20	40	40	90	90	150	220	300	500	900
Max. speed			N_{max}	min^{-1}	20000	15000	12000	10000	9000	8000	7000	7000	6000	6000	5000	4500	3000	1500	1500
Angular misalignment		K	ΔW_w	°	3	3	3	3	3	3	3	3	3	3	3	3	3	3	3
		L			4.5	4.5	4.5	4.5	4.5	4.5	4.5	4.5	4.5	4.5	4.5	4.5	4.5	4.5	4.5
		D			6	6	6	6	6	6	6	6	6	6	6	6	6	6	6
Radial misalignment		K	ΔW_r	mm	0.18	0.24	0.36	0.42	0.48	0.57	0.6	0.72	0.75	0.84	0.9	1.0	1.2	1.5	1.8
		L			0.27	0.36	0.54	0.63	0.72	0.86	0.9	1.0	1.1	1.2	1.3	1.6	1.8	2.2	2.7
		D			0.36	0.48	0.72	0.84	0.96	1.1	1.2	1.4	1.5	1.7	1.8	2.0	2.4	3.0	3.6
Axial misalignment (tension)		K	ΔW_a	mm	0.4	0.5	0.6	0.6	0.8	0.8	1.0	1.0	1.2	1.2	1.6	2.0	2.0	2.5	3.2
		L			0.6	0.8	0.9	0.9	1.3	1.3	1.5	1.5	1.8	1.8	2.4	3.0	3.0	3.6	4.8
		D			0.8	1.0	1.2	1.2	1.6	1.6	2.0	2.0	2.4	2.4	3.2	4.0	4.0	5.0	6.4
Angle of twist at nominal torque		K	φN ±25 %	°	1.0	1.0	1.0	1.0	1.0	1.0	1.0	1.0	1.5	1.8	2.0	2.0	2.0	2.5	2.5
		L			1.7	1.7	1.7	1.7	1.7	1.7	1.7	2.0	2.4	2.5	2.5	2.5	2.7	3.2	3.2
		D			2.0	2.3	2.5	2.5	2.5	2.5	2.5	2.8	2.8	3.0	3.0	3.05	3.5	4.0	4.0
Inertia (nominal bore)	**MM**	K	$kgm^2 \cdot 10^{-4}$		0.013	0.040	0.14	0.24	0.59	0.83	1.95	2.57	5.54	5.64	13.6	29.6	42.8	131	332
		L			0.015	0.048	0.16	0.28	0.68	0.96	2.18	2.91	6.27	6.48	15.6	34.1	48.5	151	386
		D			0.017	0.053	0.18	0.31	0.75	1.06	2.40	3.25	7.00	7.32	17.5	38.6	56.2	175	440
	MF	K	$kgm^2 \cdot 10^{-4}$		0.039	0.16	0.32	0.51	0.89	1.28	2.07	2.80	5.24	5.80	13.2	27.9	47.7	142	353
		L			0.041	0.17	0.34	0.54	0.98	1.42	2.29	3.14	5.97	6.65	15.2	32.4	53.4	161	407
		D			0.043	0.18	0.36	0.57	1.04	1.51	2.52	3.47	6.70	7.48	17.1	36.9	61.1	186	461
	FF	K	$kgm^2 \cdot 10^{-4}$		0.065	0.28	0.50	0.77	1.19	1.73	2.18	3.03	4.94	5.96	12.8	26.3	52.6	152	374
		L			0.067	0.29	0.52	0.80	1.28	1.87	2.41	3.37	5.67	6.80	14.8	30.8	58.3	172	428
		D			0.069	0.30	0.54	0.84	1.34	1.96	2.63	3.70	6.40	7.65	16.8	35.3	66.0	196	482
Weight (nominal bore)	**MM**	K		kg	0.032	0.065	0.13	0.17	0.31	0.35	0.65	0.69	1.19	1.14	2.07	3.35	4.16	8.08	14.2
		L			0.036	0.075	0.15	0.19	0.36	0.40	0.71	0.77	1.34	1.29	2.35	3.87	4.69	9.18	16.3
		D			0.039	0.080	0.17	0.21	0.39	0.43	0.79	0.85	1.5	1.46	2.65	4.35	5.39	10.65	18.5
	MF	K		kg	0.039	0.094	0.16	0.19	0.30	0.34	0.53	0.58	0.94	0.94	1.68	2.75	3.57	6.93	11.9
		L			0.043	0.104	0.17	0.21	0.34	0.39	0.59	0.66	1.08	1.10	1.98	3.20	4.09	7.95	14.1
		D			0.047	0.111	0.19	0.23	0.38	0.43	0.67	0.74	1.24	1.25	2.27	3.69	4.79	9.45	16.2
	FF	K		kg	0.046	0.122	0.17	0.21	0.28	0.34	0.41	0.46	0.68	0.74	1.27	2.11	3.00	5.75	9.6
		L			0.050	0.133	0.19	0.23	0.33	0.39	0.48	0.55	0.83	0.89	1.58	2.56	3.50	6.84	11.8
		D			0.054	0.140	0.21	0.25	0.36	0.42	0.56	0.63	0.99	1.05	1.86	3.05	4.25	8.26	13.9

ORDERING EXAMPLES:

Type MM, size 35, lenght D, pilot bored:
mm 35 D Flex coupling, pilot bored, part no 6111307

Type MM, size 25, lenght L, bore with keyway: one side 20 mm / other side 25 mm:
MM 25 L Flex coupling, d1 = 20-H7, keyway DIN 6885/1, d2 = 25-H7, keyway DIN 6885/1

Type MF, size 16, lenght K, for temperature 300°C, bore 16 mm with keyway and grubscrew:
MF 16 K Flex coupling hardsoldered, d = 16-H7, keyway DIN 6885/1 + grubscrew

FLEX COUPLINGS

FN, K-MM

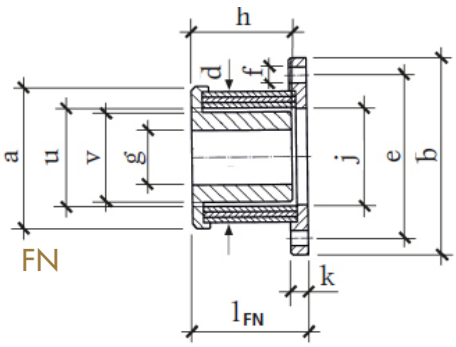

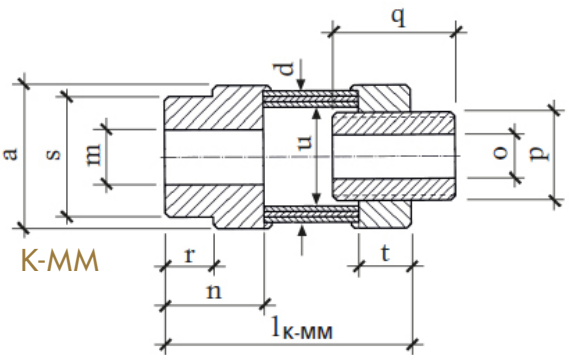

DIMENSIONS

			20	25	35	45	55
FN	*a*	mm	50	65	85	105	125
	b		75	90	120	150	180
	l_{FN}		44	52	66	86	110
	d	mm	45	60	80	100	120
	e		62	74.5	101.5	130	155.5
	f		6×Ø5.8	4×Ø7	8×Ø7	8×Ø9.5	8×Ø11.5
	g pilot bored	mm	9	14	23	28	33
	g max. with keyway		20	30	42	55	65
	h		36	45	57	77	98
	j^{H7}	mm	32	44	60	75	88
	k		8	8	11	12	15
	v		30	41	55	72	84
Part number of pilot bored design			6109993	6110044	6110054	6110097	6110152
K-MM	*a*	mm	50	65	85	105	125
	d		45	60	80	100	120
	l_{K-MM}		85	110	145	185	225
	m pilot bored	mm	9	15	19	28	33
	m max. with keyway		25	35	45	60	75
	n		35	45	60	75	90
	o max. with keyway	mm	16	25	35	45	55
	p		6×26×30	8×36×40	8×52×58	8×62×68	10×72×78
	q		40	55	75	95	115
	r	mm	18	21.5	27	37	47
	s		40	55	70	90	105
	t		17	21.5	33	38	43
	u		33	45	61	76	90
Part number bored design without splined shaft			6110348	6110353	6110365	6110371	6110374
Part number for splined shaft			6111629	6111630	6111632	6111633	6111634

SPECIFICATIONS

Nominal bore in mm = size				20	25	35	45	55
Nominal torque		M_N	Nm	75	150	300	600	900
Max. speed		n_{max}	min^{-1}	7000	6000	3000	1500	1500
Angular misalignment		ΔW_w	°	2	2	2	2	2
Radial misalignment		ΔW_r	mm	0.4	0.5	0.7	0.9	1.1
Axial misalignment (tension)		ΔW_r	mm	0.6	1.0	1.25	1.65	2
Angle of twist at M_N		φN ±25 %	°	1.5	2.5	2.5	3	3.5
Inertia (max. bore)	**FN**	J	$kgm^2 \cdot 10^{-4}$	2.98	7.74	31.5	93.8	245
	K-MM			2.72	10.7	42.6	124	294
Weight (max. bore)	**FN**	m	kg	0.55	0.96	2.15	4.1	7.6
	K-MM		mm	0.79	1.73	4	7.3	12

FLEX COUPLINGS WITH CLAMP-HUB

MM, MF

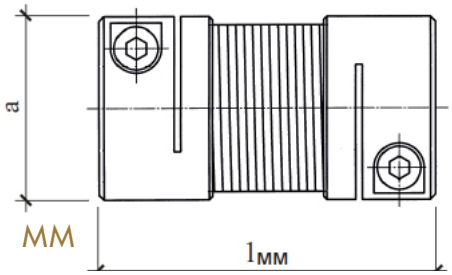

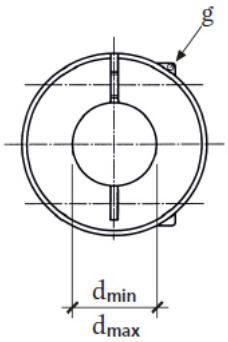

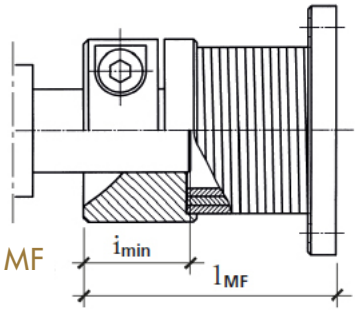

DIMENSIONS

Nominal bore in mm = size			06	08	12	14	16	19	20	24	25	28
Nominal torque	LENGTH	Nm	2.5	5	10	10	20	20	40	40	90	90
a		mm	17	21	26	30	35	38	45	48	55	56
d_{min}			3	4	7	7	10	10	12	12	15	15
d_{max}			6	8	12	14	16	19	20	24	25	28
i_{min}			8	10	15	15	20	20	25	25	31	31
l_{MMt}	K	mm	25	35	50	50	65	65	80	80	100	100
	L		30	45	60	60	80	80	95	95	120	120
	D		35	50	70	70	90	90	110	110	140	140
l_{MF}	K	mm	20	30	40	40	50	50	60	60	75	75
	L		25	40	50	50	65	65	75	75	95	95
	D		30	45	60	60	75	75	90	90	115	115
g (DIN 912-12.9)		mm	M2.5×8	M3×10	M4×12	M4×12	M5×16	M5×16	M6×20	M6×20	M8×25	M8×25
Screw tightening torque		Nm	1.2	2.1	4.9	4.9	9.7	9.7	16.5	16.5	40	40
Max. tolerance of the shaft			*h9*									

The types MM of sizes 06 to 28 are available with clamp-hub one-sided or two-sided. The types MF of sizes 06 to 28 correspondingly available with only one clamp-hub. The specifications and other dimensions correspond to the standard model.

CALCULATION OF FLEX COUPLINGS

Formula

$$M_{rec} = \frac{9550}{n} \times kW \times S \times k \; [Nm]$$

n = Revolutions per min
S = Safety factor (look at table)
k = Starting frequency-factor (look at table)

The specifications about maximum misalignment and speed must be observed. The maximum limits of misalignments should not occur simultaneously.

Safety factor S

Load	Hours operating day	Type of machine: Electric motor	Type of machine: Hydraulic motor
Light, even load	4	0.8	1
	8	1	1.25
	24	1.25	1.5
Irregular shock-free load, few drive reversals	4	1	1.25
	8	1.25	1.5
	24	1.5	1.75
Irregular shock load, few drive reversals	4	1.25	1.5
	8	1.5	1.75
	24	1.75	2
Arduous driving conditions, frequent drive reversals	4	1.5	1.75
	8	1.75	2
	24	2	2.25

Starting frequency-factor k

Max. number of starts per hour	30	60	20	180
Starting frequency-factor k	1	1.2	1.5	2

MINIFLEX COUPLINGS

LM, ZG

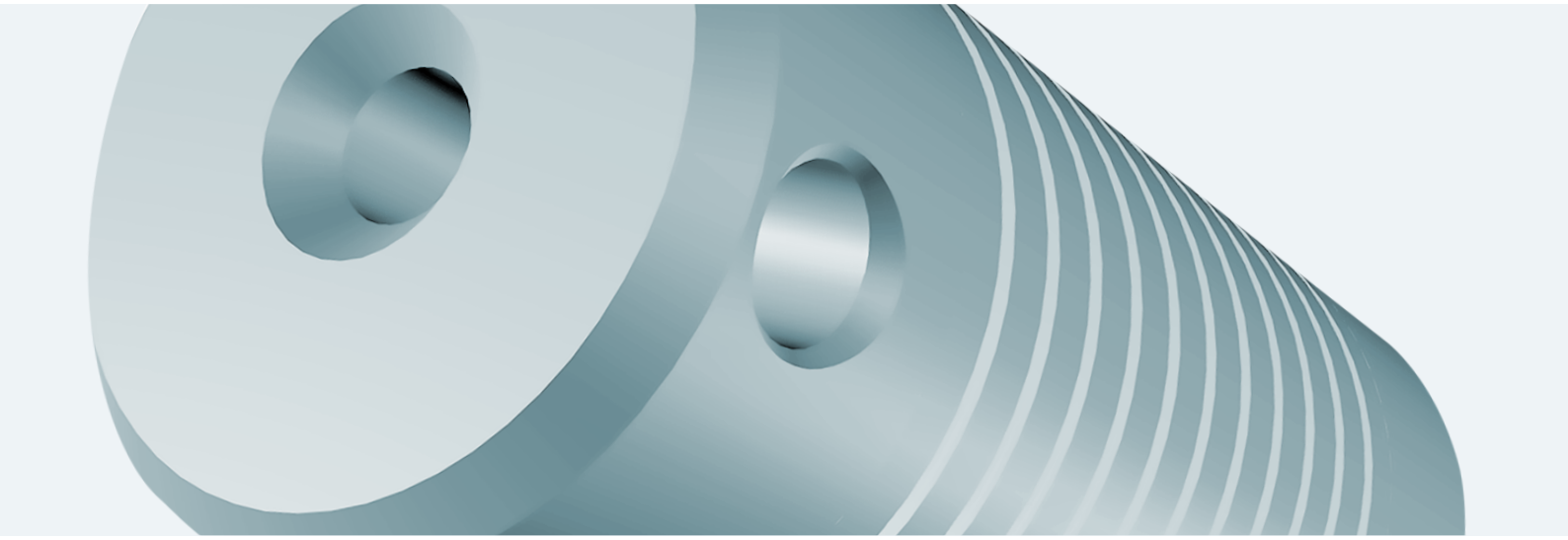

FEATURES/STRUCTURE

- All-round movable
- Rotation-elastic transmission element (spring assembly) edgewise up coiled helical compression spring, of wire with rectangular cross section, with spring ends screwed into hubs (LM), respectively pushed into hubs (ZG)
- Use temperature up to 120 °C

STANDARD MODELS

TYPE LM

Spring body made of stainless steel wire in two lengths per size.
Light metal hubs with different finished bores (tolerance H7). Inserted set screw (type DIN 916) inclusive.

TYPE ZG

Spring body made of nickel- plated spring steel wire. Zinc compression cast hubs with different finished bores (tolerance +0.05/0). Inserted set screw (type DIN 916) inclusive.

SPECIAL MODELS

Possible for both types, referring to spring assembly and hub. Feel free to contact us.

AVAILABILITY

All standard couplings are available at short notice, even with different bores on each side. For special applications and non-standard executions please contact us.

TYPES

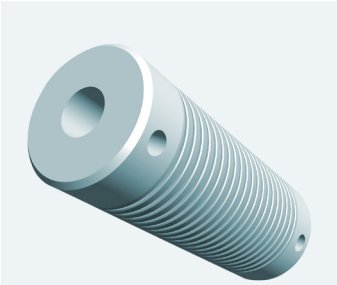

LM

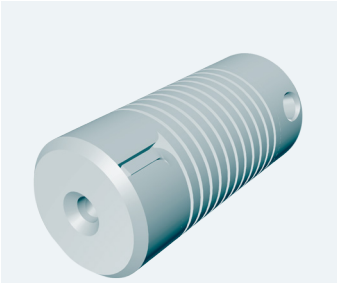

ZG

MINIFLEX COUPLINGS

LM, ZG

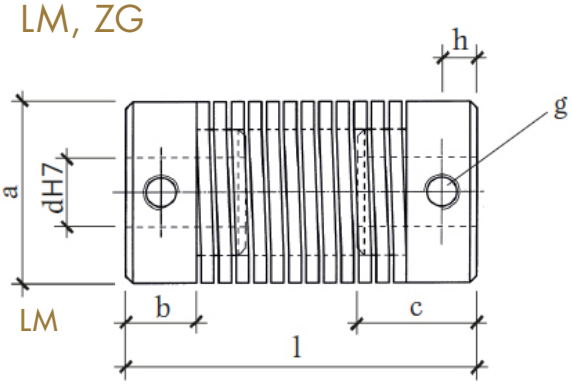

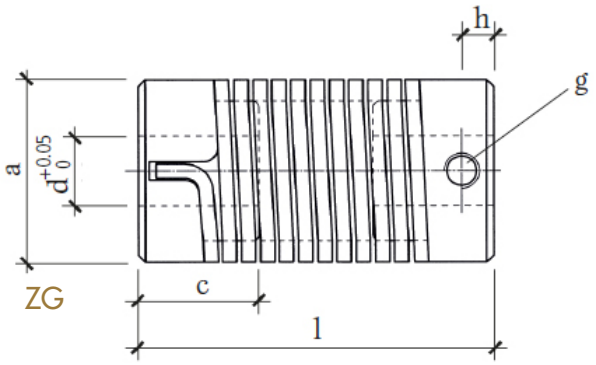

DIMENSIONS

TYPES			LM						ZG		
Size (l x a)			35 x 14	50 x 14	40 x 20	60 x 20	50 x 26	70 x 26	25 x 12	35 x 16	50 x 26
Nominal torque		Nm	0.5		1.0		2.0		0.15	0.5	1.5
a		mm	14		20		26		12	16	26
b			6.5		7.5		10		–	–	–
c			12		14		17		9	12.5	17
d	H7	mm	4, 5, 6		5, 6, 7, 8, 9		8, 9, 10, 11, 12, 14		–	–	–
d	+0.05 0	mm	–		–		–		2, 3, 4, 5, 6	3, 4, 5, 6, 7, 8	6, 7, 8, 9, 10, 11, 12, 14
g		mm	M4		M4		M5		M3	M4	M5
h			3.5		4		5		2.4	3.5	4.5
l			35	50	40	60	50	70	25	35	50

ODERING EXAMPLE:

Type LM, size 40 x 20 mm, bore-diameter 6 and 8 mm:
Miniflex coupling LM, 40 x 20 x 6 / 8 mm

SPECIFICATIONS

TYPE			LM						ZG		
Size (l x a)			35 x 14	50 x 14	40 x 20	60 x 20	50 x 26	70 x 26	25 x 12	35 x 16	50 x 26
Nominal torque	M_N	Nm	0.5		1.0		2.0		0.15	0.5	1.5
Max. speed	n_{max}	min^{-1}	6000		6000		6000		8000	3000	3000
Angular misalignment	ΔW_W	°	8	14	8	14	8	14	5	5	5
Radial misalignment	ΔW_r	mm	1.5	2.0	2.0	3.0	3.0	4.5	0.5	1.0	1.5
Axial misalignment	ΔW_a	mm	±1.0	±1.5	±1.5	±1.5	±1.0	±1.5	±0.5	±1.0	±1.0
Angle of twist at nominal torque	φN ±5 %	°	37	72	37	72	37	72	40[1]/60[2]	50[1]/70[2]	40[1]/60[2]
Inertia (d_{min})	J	$kgm^2 \cdot 10^{-6}$	0.593	0.899	2.76	4.48	9.38	13.99	0.195	1.22	11.77
Weight(d_{min})	m	kg	0.016	0.024	0.037	0.058	0.070	0.102	0.014	0.028	0.100

1 Rotation cw on drive side
2 Rotation ccw on drive side

BELLOW COUPLINGS

CHP

CLEARANCE
Ask for your discount – while stock lasts

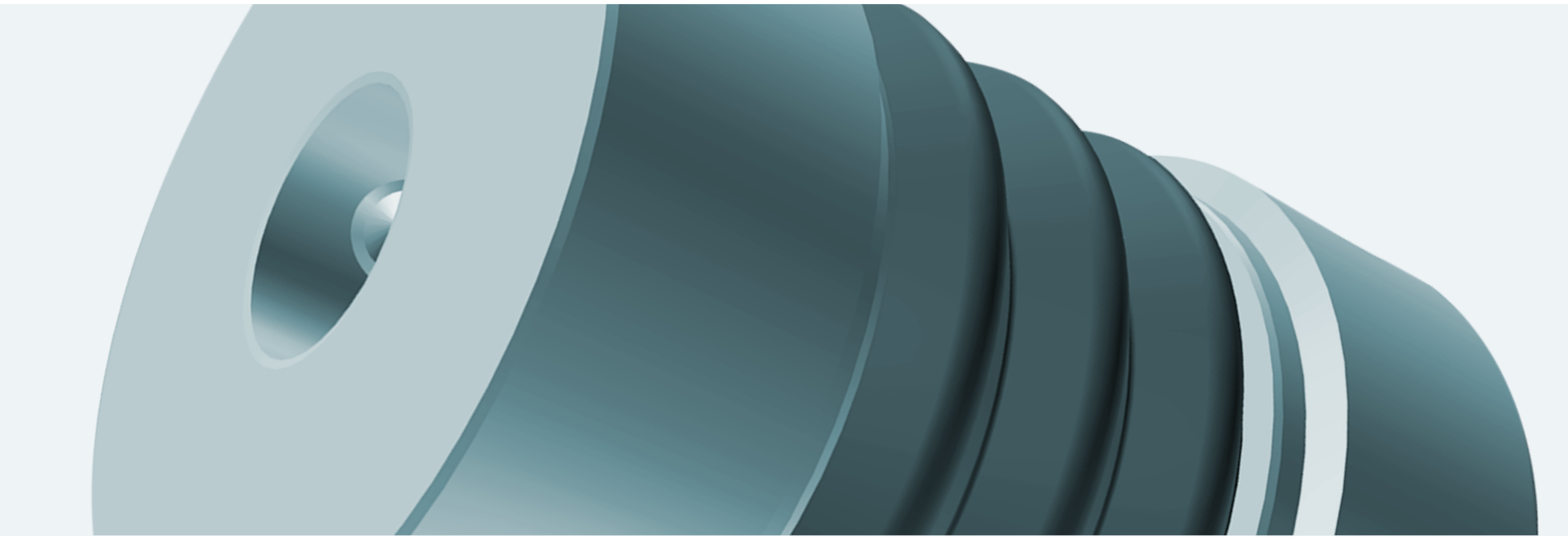

FEATURES/USES

- Torsionally stiff, play-free attachments to shaft
- Accurate transmission of the rotary motion; at the same time the shaft misalignment caused by inaccuracy of installation, thermal expansion, etc. is compensated within the specified range
- Range of permitted deviation reduced to 50% if number of revolutions is more than 2000 min^{-1}

TYPE

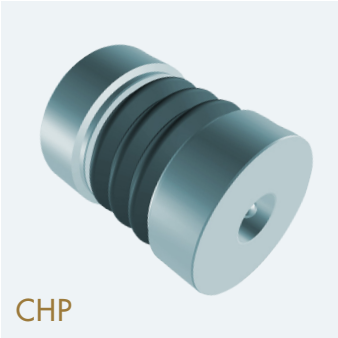

Bellow coupling made of plastic bellow and aluminium hubs. Use temperature between – 20 °C to + 60 °C.

These products are no longer manufactured. Available only while stock lasts. Please contact us for availability and your individual discount.

BELLOW COUPLINGS

CHP

CLEARANCE
Ask for your discount – while stock lasts

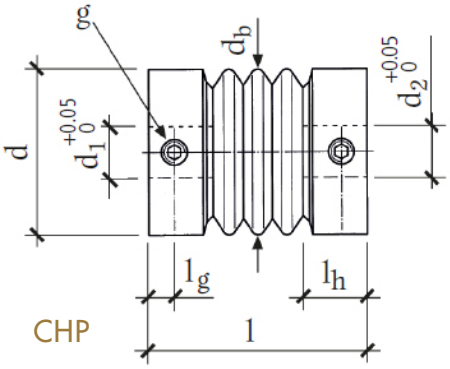

CHP

DIMENSIONS

TYPES			CHP		
Size			**20**	**26**	**34**
l		mm	28	34	40
l_h		mm	8	10	12
l_g		mm	3	4	5
d		mm	20	26	34
d_b		mm	19.5	25.5	33.5
d_{max}		mm	8	13	18
g			2×M3	2×M4	2×M5
Part number (storing)					
	d1/d2	3/3	6109881		
		5/5	6109882		
		6/6		6109883	
		8/8		6109885	6109890
		10/10			6109892
		12/12			6109893

SPECIFICATIONS

TYPE			CHP		
Size			**20**	**26**	**34**
Nominal torque	M_N	Nm	0.4	0.7	1.5
Max. speed	n_{max}	min^{-1}	9000	7000	5500
Torsional stiffness	C	Nm/°	0.1	0.22	0.57
Angular misalignment	ΔW_W	°	10	10	10
Radial misalignment	ΔW_r	mm	0.5	0.5	0.5
Axial misalignment	ΔW_a	mm	±0.5	±0.5	±0.5
Inertia (d_{max})	J	$kgm^2 \cdot 10^{-6}$	0.63	2.4	7.9
Weight(d_{max})	m	g	12	26	51

ORDERING EXAMPLE:

Type CHP, size 26 mm, bore both side 8 mm:
Bellow coupling CHP, part no 6109885

These products are no longer manufactured. Available only while stock lasts. Please contact us for availability and your individual discount.

LOCKING ASSEMBLIES

DKWN

CLEARANCE
Ask for your discount – while stock lasts

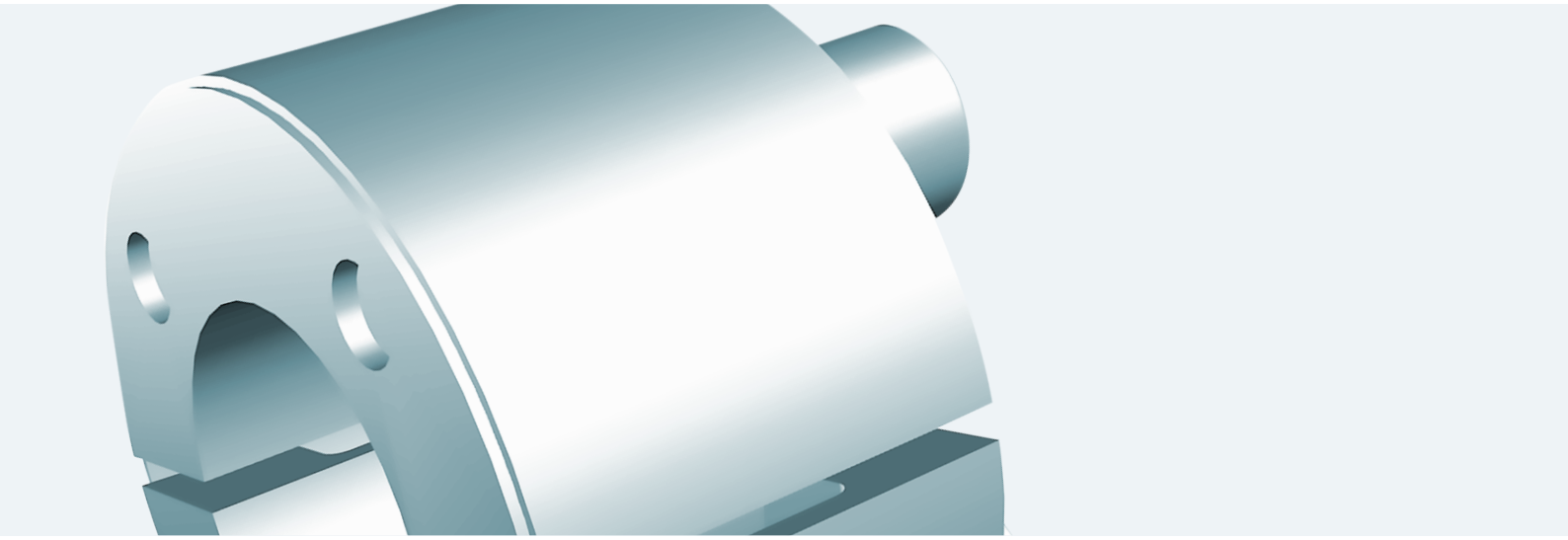

FEATURES

- Simple design
- Ideal stress distribution between shaft and hub
- High transmittable torque
- High concentricity
- Forcing screw thread for simple release
- No special tools required

TYPE

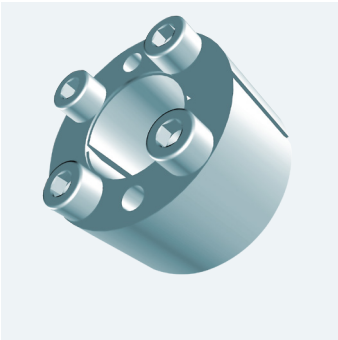

FIT SIZES, SURFACE

- Shaft and hub up to quality h9/H9
- Depth of roughness shaft/hub <12 µm
- Rotation up to shafts-∅ 28 mm: 0.02 mm; from 30 mm: 0.04 mm

INSTALLATION

Engage the locking assembly slightly oiled, do not use MoS_2 or grease. Tighten screws, crosswise moved, to tightening torque in several steps. Important: the locking assembly must be located in the bore at least with the measure «L».

REMOVAL

Loosen the screws crosswise, use fixed forcing threads if necessary.

These products are no longer manufactured. Available only while stock lasts. Please contact us for availability and your individual discount.

LOCKING ASSEMBLIES

DKWN

CLEARANCE
Ask for your discount – while stock lasts

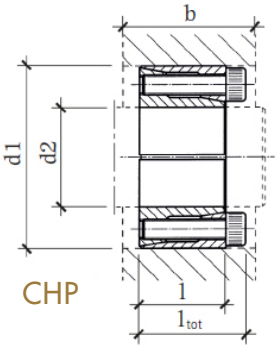

CHP

CALCULATION OF HUB OUTSIDE DIAMETER

Formula

$$D_N \geqq D \cdot \sqrt{\frac{\sigma_{0.2N} + P_N \cdot C}{\sigma_{0.2N} - P_N \cdot C}}$$

C = 0.6 width of the hub design b = 2 × l
C = 1.0 width of the hub design b = l

Service factors

Type of machine	LOAD permanent	pulsating	alternating
Electric motor	*1*	*1.5*	*2*
Piston type pumps, compressor	*1.5*	*2.5*	*3*

Part number	Dimensions				Transmittable		Surface pressure		Screw (DIN 912-12.9)		Tightening torque	Inertia	Weight
					Dreh-moment	Axialkraft	an Welle	an Nabe					
	d2	d1	l	l_{tot}	m_t	f_{ax}	P_W	P_N	Size	No.	m_a	J	m
	mm	mm	mm	mm	Nm	kN	N/mm²	N/mm²			Nm	kgcm²	kg
6109896	*6*	*16*	*11*	*13.5*	*6*	*2*	*150*	*55*	*M2.5×10*	*3*	*1.2*	*0.005*	*0.012*
6109895	*6.35*	*16*	*11*	*13.5*	*6*	*2*	*140*	*55*	*M2.5×10*	*3*	*1.2*	*0.005*	*0.012*
6109898	*7*	*17*	*11*	*13.5*	*8*	*2*	*125*	*55*	*M2.5×10*	*3*	*1.2*	*0.006*	*0.013*
6109899	*8*	*18*	*11*	*13.5*	*10*	*2.5*	*110*	*50*	*M2.5×10*	*3*	*1.2*	*0.008*	*0.015*
6109901	*9*	*20*	*13*	*15.5*	*15*	*3*	*120*	*55*	*M2.5×12*	*4*	*1.2*	*0.013*	*0.020*
6109900	*9.53*	*20*	*13*	*15.5*	*15*	*3*	*110*	*55*	*M2.5×12*	*4*	*1.2*	*0.013*	*0.020*
6109902	*10*	*20*	*13*	*15.5*	*15*	*3*	*110*	*55*	*M2.5×12*	*4*	*1.2*	*0.013*	*0.019*
6109903	*11*	*22*	*13*	*15.5*	*18*	*3*	*100*	*50*	*M2.5×12*	*4*	*1.2*	*0.019*	*0.023*
6109904	*12*	*22*	*13*	*15.5*	*20*	*3*	*90*	*50*	*M2.5×12*	*4*	*1.2*	*0.018*	*0.022*
6109906	*14*	*26*	*17*	*20*	*35*	*5*	*105*	*55*	*M3×16*	*4*	*2.1*	*0.045*	*0.039*
6109907	*15*	*28*	*17*	*20*	*40*	*5*	*100*	*50*	*M3×16*	*4*	*2.1*	*0.059*	*0.044*
6109908	*16*	*32*	*17*	*21*	*70*	*8*	*130*	*65*	*M4×16*	*4*	*4.9*	*0.113*	*0.066*
6109909	*17*	*35*	*21*	*25*	*75*	*8*	*120*	*60*	*M4×20*	*4*	*4.9*	*0.183*	*0.092*
6109910	*18*	*35*	*21*	*25*	*80*	*8*	*115*	*60*	*M4×20*	*4*	*4.9*	*0.180*	*0.087*
6109911	*19*	*35*	*21*	*25*	*85*	*8*	*110*	*60*	*M4×20*	*4*	*4.9*	*0.176*	*0.084*
6109912	*20*	*38*	*21*	*26*	*150*	*15*	*140*	*75*	*M5×20*	*4*	*9.7*	*0.254*	*0.10*
6109913	*22*	*40*	*21*	*26*	*160*	*14*	*130*	*70*	*M5×20*	*4*	*9.7*	*0.306*	*0.11*
6109914	*24*	*47*	*26*	*32*	*250*	*20*	*140*	*75*	*M6×25*	*4*	*16.5*	*0.739*	*0.20*
6109916	*25*	*47*	*26*	*32*	*260*	*20*	*135*	*75*	*M6×25*	*4*	*16.5*	*0.727*	*0.19*
6109915	*25.4*	*47*	*26*	*32*	*265*	*20*	*130*	*75*	*M6×25*	*4*	*16.5*	*0.722*	*0.19*
6109917	*28*	*50*	*26*	*32*	*440*	*30*	*185*	*100*	*M6×25*	*6*	*16.5*	*0.910*	*0.22*
6109919	*30*	*55*	*26*	*32*	*470*	*30*	*175*	*95*	*M6×25*	*6*	*16.5*	*1.34*	*0.27*
6109920	*32*	*55*	*26*	*32*	*500*	*30*	*165*	*95*	*M6×25*	*6*	*16.5*	*1.29*	*0.25*
6109921	*35*	*60*	*31*	*37*	*730*	*40*	*165*	*95*	*M6×30*	*8*	*16.5*	*2.27*	*0.36*
6109922	*38*	*65*	*31*	*37*	*800*	*40*	*155*	*90*	*M6×30*	*8*	*16.5*	*3.15*	*0.43*
6109923	*40*	*65*	*31*	*37*	*840*	*40*	*145*	*90*	*M6×30*	*8*	*16.5*	*3.02*	*0.40*
6109924	*42*	*75*	*36*	*44*	*1200*	*55*	*165*	*90*	*M8×35*	*6*	*40*	*6.52*	*0.69*
6109925	*45*	*75*	*36*	*44*	*1300*	*55*	*155*	*90*	*M8×35*	*6*	*40*	*6.22*	*0.63*
6109927	*48*	*80*	*36*	*44*	*1850*	*75*	*195*	*115*	*M8×35*	*8*	*40*	*8.14*	*0.74*
6109928	*50*	*80*	*36*	*44*	*1900*	*75*	*185*	*115*	*M8×35*	*8*	*40*	*7.86*	*0.70*

ORDERING EXAMPLE: Locking assembly DKWN 18-35, **Part no. 6109910**

These products are no longer manufactured. Available only while stock lasts. Please contact us for availability and your individual discount.

SPECIAL SOLUTION

FLEX COUPLINGS

FLEX COUPLING MM 24 K

Short hubs and reworked outside diameter.

FLEX COUPLING MM 12 K

Special hub in brass and mounted screw M6.

YOUR COUPLING

We offer customized couplings. Contact us and we will find the right coupling for your needs.

OUR CONTACT

BAUMANN Springs Ltd.
Fabrikstrasse
CH-8734 Ermenswil

+41 55 286 81 11
couplings@baumann-group.com
www.baumann-group.com